SYMETRICS Wall-mounted basin spout without pop-up waste - Brushed Durabrass (23kt Gold)

13 800 740

- 125mm projection
- fixed spout
- rectangular, air-enriched flow
- hole diameter 37 mm
- 1/2" connection
- plug-link mounting
- max. flow 5 l/min
- lead-free

The mounting height from the top edge of the basin to the centre of the connection should be at least 125 mm. The front edge of the spout should be at least 20 mm in front of the back edge of the sink.

For Touchfree control please order eSet Touchfree WITH or WITHOUT temperature adjustment

Recommended miscellaneous

Concealed wall elbow - 35 085 970 90
●max. recess depth 163 mm
●min. recess depth 90 mm

SYMETRICS Wall-mounted basin spout without pop-up waste - Brushed Durabrass (23kt Gold)

13 800 740
mm [inches]

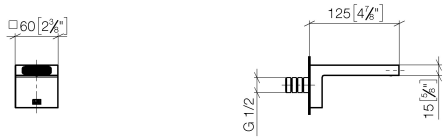

Flow rate chart

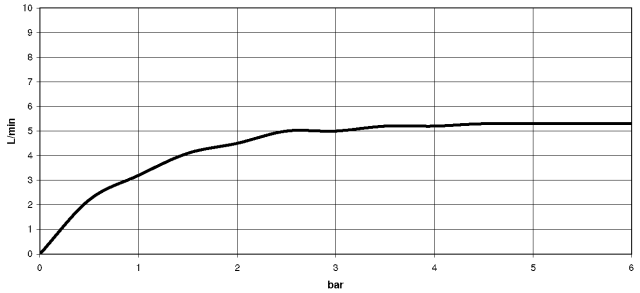

Trajectory diagram

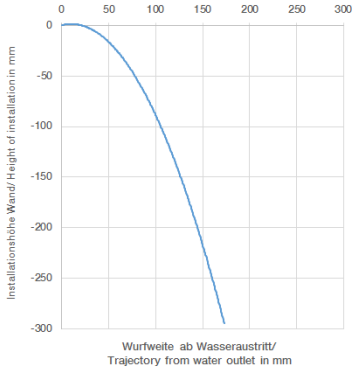

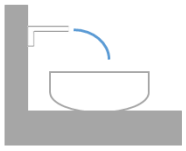

SYMETRICS Wall-mounted basin spout without pop-up waste - Brushed Durabrass (23kt Gold)

13 800 740

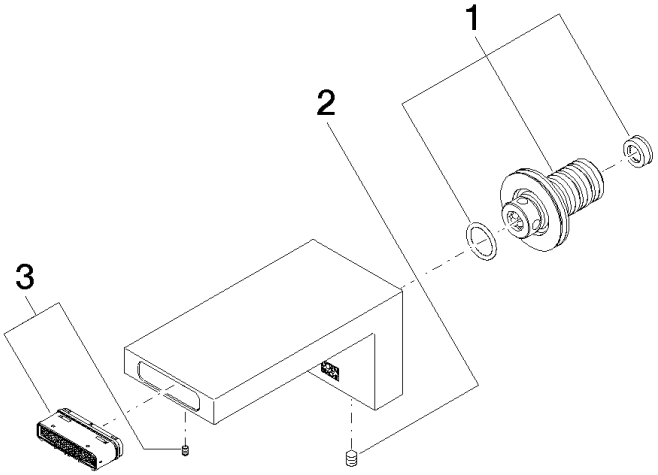

Spare parts list

No.	Item Number	Name	Quantity used	Delivery time
1	90 24 03 108 00 90	nipple set	1	2
2	90 31 11 004 00 90	pin	1	2
3	90 29 03 067 00 90	aerator	1	2

We reserve the right to change designs, product range and technical specifications without prior notice.
More information can be found at: www.dornbracht.com +49 (0) 2371 8899 900 mail@dornbracht.com